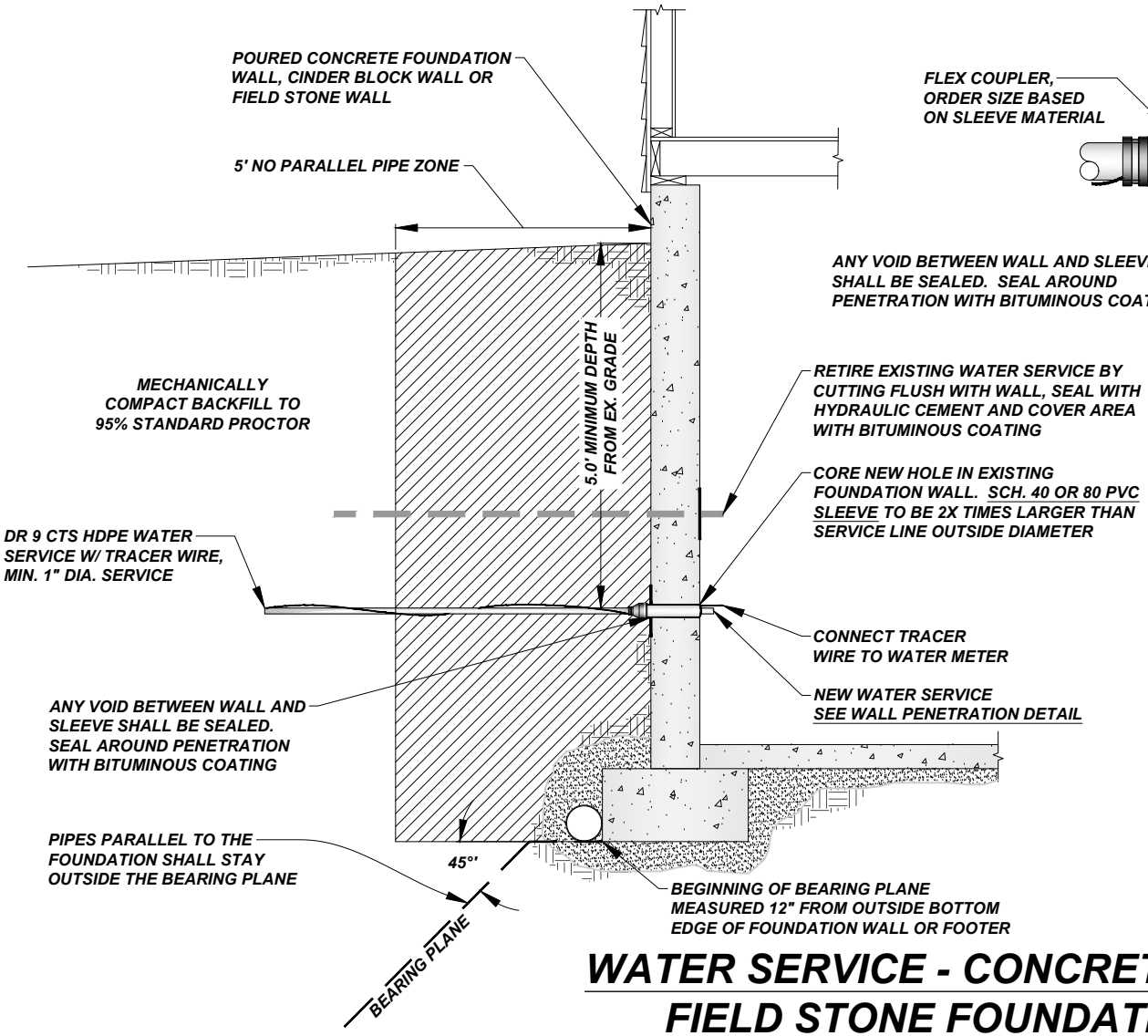

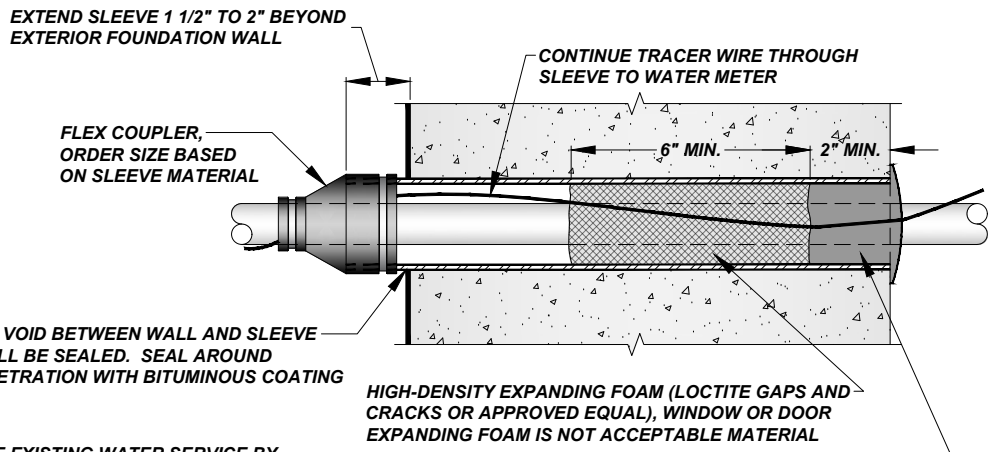

WALL PENETRATION DETAIL

NOTES:

1. CONTRACTOR IS RESPONSIBLE TO SPEAK WITH THE HOMEOWNER OR BUSINESS CONCERNING LANDSCAPING PRIOR TO PROCEEDING
2. SLEEVE MAY BE EXTEND BEYOND LANDSCAPING, PORCH, CONCRETE AND OTHER OBSTRUCTIONS WITH PERMISSION BY A CITY REPRESENTATIVE
3. RESTORE YARD AREAS WITH 4" TOPSOIL WITH TYPE 'U' SEED (MINUS CLOVER) WITH STRAW MATS
4. INSTALL TWO (2) 8' LONG COPPER GROUNDING RODS 6' APART PER NEC 2008 STANDARDS WHEN REQUIRED. NO. 6 GAUGE MIN. WIRE SIZE
5. OPEN CUT INSTALLATION - TRACER WIRE TO BE COPPERHEAD, 12 AWG, 452 POUNDS BREAK LOAD
6. DIRECTIONAL BORING - TRACER WIRE TO BE COPPERHEAD, 12 AWG, 1,150 POUNDS BREAK LOAD, 2 WIRES REQUIRED

WATER SERVICE - CONCRETE, CINDER BLOCK OR FIELD STONE FOUNDATION PENETRATION

NOT TO SCALE