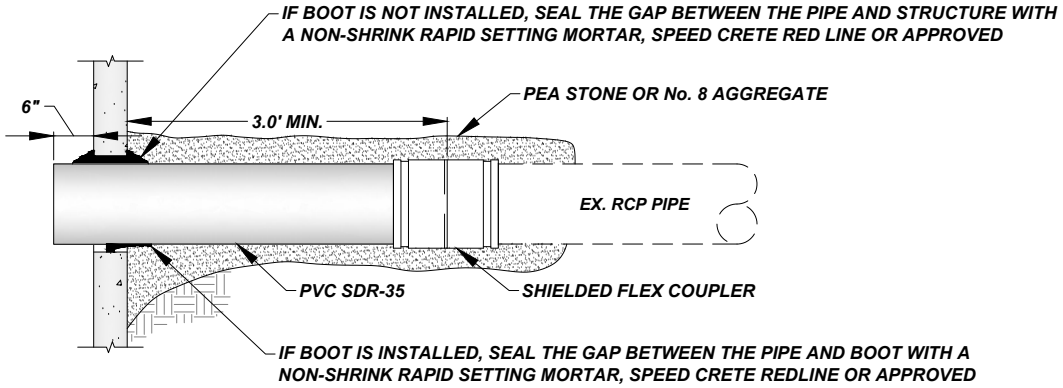
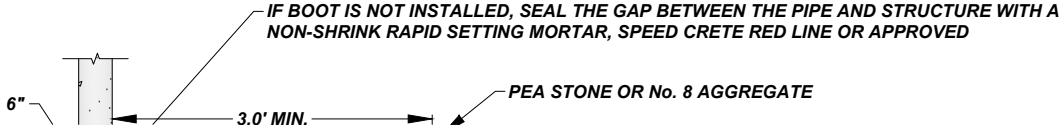
SHIELDED FLEX COUPLER CONNECTION