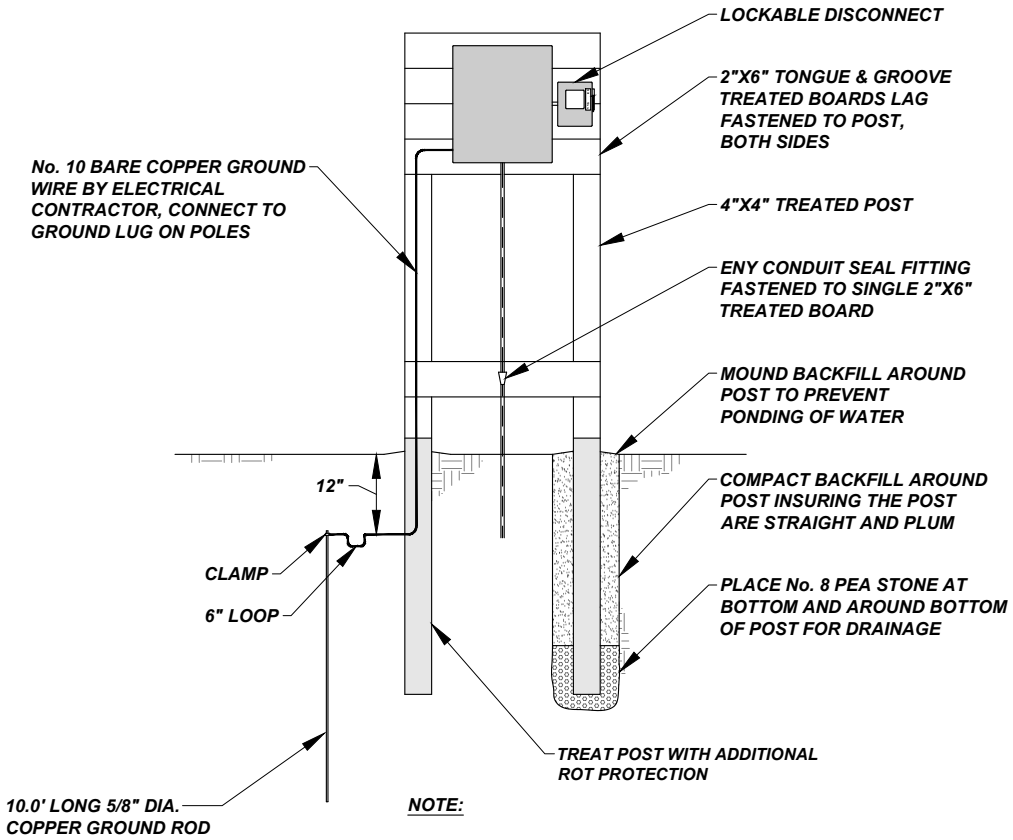

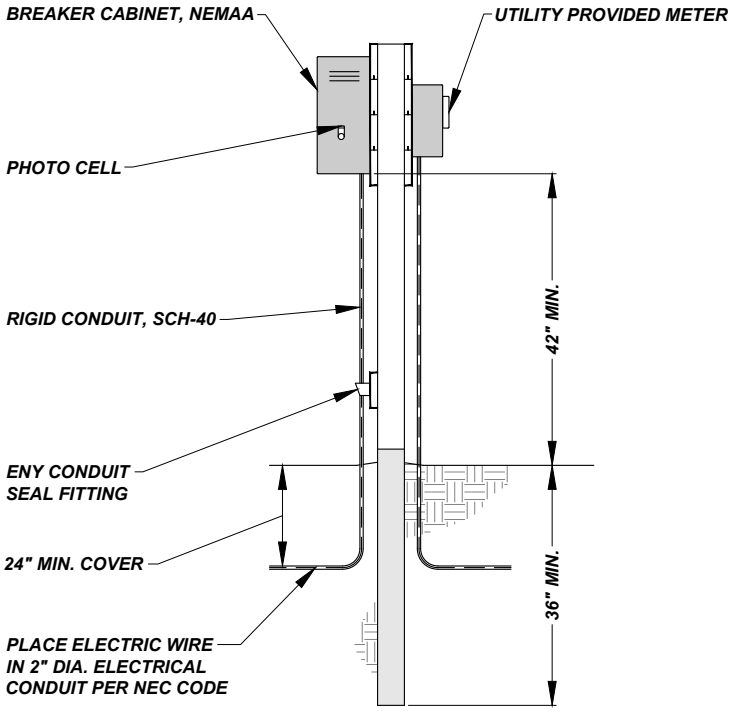

NOTE:

1. EVERY OTHER LIGHT SHALL BE ON A SEPARATE BREAKER

DECORATIVE LIGHTS H-PANEL

NOT TO SCALE