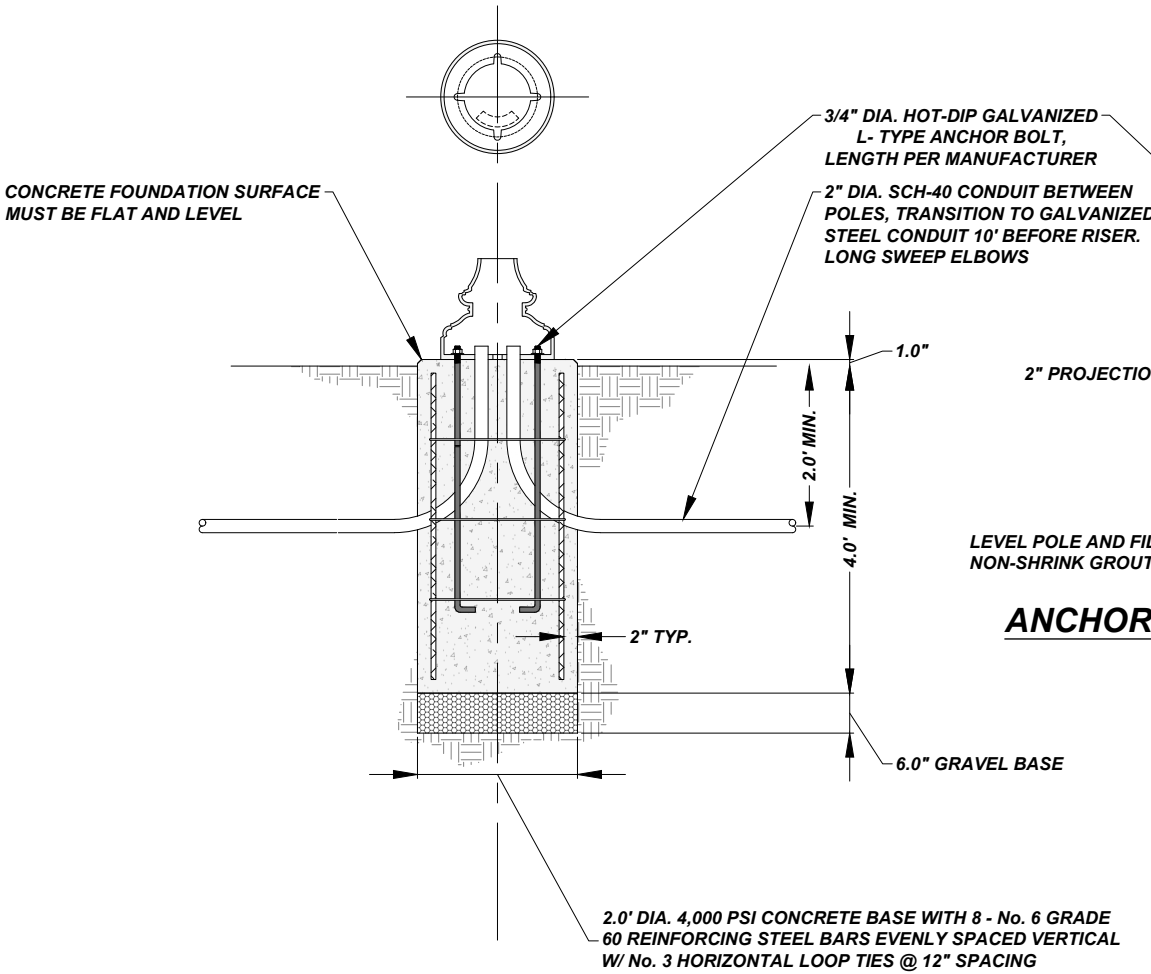

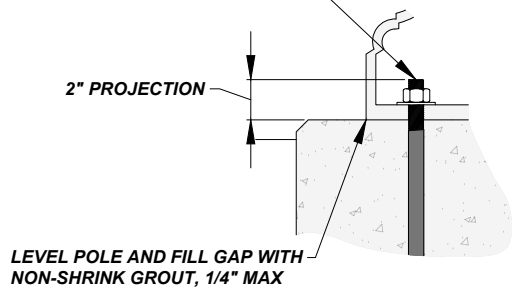

ANCHOR BOLT DETAIL

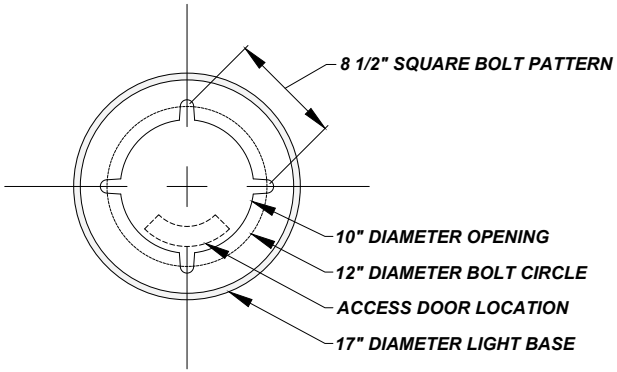

BOLT PATTERN DETAIL

DECORATIVE STREET LIGHT FOUNDATION

NOT TO SCALE